Home Systems
EZon

SHS-3120

Touchpad Access Deadbolt Lock
User Guide

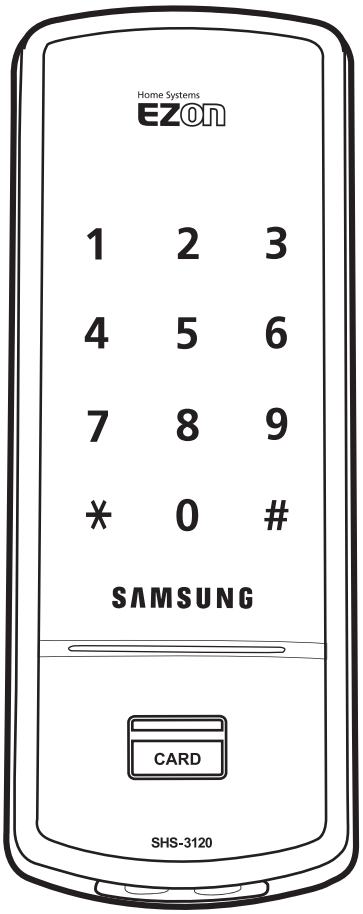

Safety precautions must be followed to protect users from personal injury and to prevent property damage. Please read carefully and use the product correctly.

Table of Contents

Warnings 2
Introduction 2
Components and Tools 3
Door Preparation 4
Install Lock 6
Miscellaneous Information 8
Features 9
Definitions 11
Operation of Lock 13
Basic Operation 14
Troubleshooting 17
Management Number Table 19
Product Specifications 20
Warranty 21
Drilling Templete Sheet 23

Warnings

Do not attempt to repair the product yourself.

Ensure that other people do not learn your PIN Code, and change it regularly.

Do not operate the product with wet hands, and avoid liquids such as water and other drinks getting inside the product.

Do not exert excessive force or use a sharp instrument to press the buttons on the Lock.

Ensure that the door is properly locked when going outside.

Check the polarity of the batteries and insert correctly into the product.

When the battery life expires, replace all batteries and do not use new batteries together with used or depleted batteries.

Use a soft, dry cloth to clean the product, and avoid water, benzene or alcohol, etc.

When you hear the battery replacement warning sound, replace with new batteries within a week.
Continuing to use the product without replacing the batteries may cause the product to stop functioning.

Introduction

Touchpad Access Deadbolt Lock is a product that combines a touchpad with a 13.56MHz Card reader and deadbolt. You can open the door using a PIN Code or a Card, and register up to 70 User PIN Codes and user Cards (supports ISO14443A type).
Implementation of a touchpad has made it more convenient to enter numbers and the Random Security function prevents hacking through traces of fingerprints remaining on the touchpad.It also provides various other convenient functions such as Automatic locking / Sound setting / Out-of-home security, etc.
You can open the door using by video intercom's monitor after connecting EZON video intercom.(Refer to page 6 to see the connection method)
This product has been tested and found to comply with the limits for a Class B digital device, pursuant to part 15 of the FCC Rules.

Components and Tools

Components

- Outside Assembly
- Inside Assembly
- Fixing Panel
- Turn Shaft
- Strike
- 4 AA Alkaline Batteries
- Card
- User Guide
- Screw Pack (6 types)
- Deadbolt
- Magnetic Sensor

Parts Drawings

Outside Assembly

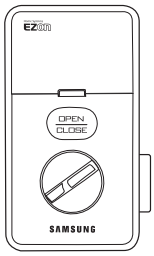

Inside Assembly

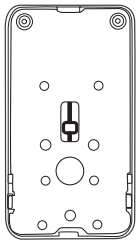
Fixing Panel

Turn Shaf

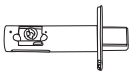
Deadbolt

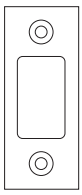
Strike

Magnetic sensor

Tools

Door Preparation

- 2-1/8˝(54mm) hole saw
- 1˝(25mm) hole saw
- 3/8˝(10mm) drill bit
- 7/64˝(2.5mm) drill bit
- Chisel and hammer

Lock Installation

- Screw driver #2
- Drill

Door Preparation

Step 1. Check Door Status

1) You can install this lock only when the door has a thickness of 1-3/8″ ~ 1-3/4″ (35 to 44 mm). (In case of an auxiliary steel plate, its thickness is also included.)
2) Check whether the deadbolt and strike can be installed or not (door distortion, location of the drilling hole, etc.).
3) Check whether the door handle is a left hand type or a right hand type.

Left hand type

The door lock is installed on the right of the door when it is viewed from the outside.

Right hand type

The door lock is installed on the left of the door when it is viewed from the outside.

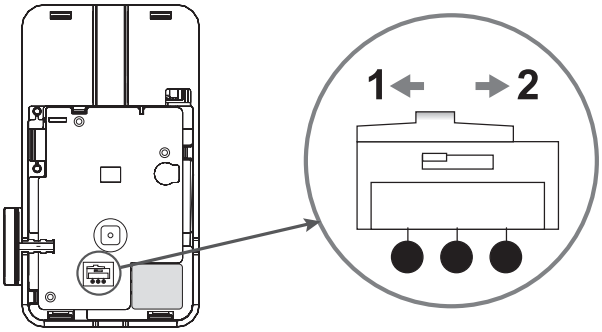

Left Hand Setting
Set the switch to 2.

Right Hand Setting
Set the switch to 1.

Step 2. Mark door

Check the location and direction of the deadbolt, attach the drilling template sheet (page 23) on the side of the door, and mark on it with a pen.

1) Align the horizontal line across the door.
2) Align the vertical line over the door.
3) Mark the centers of the holes with the template sheet.
4) Mark the centerline of the deadbolt by aligning it with the vertical line

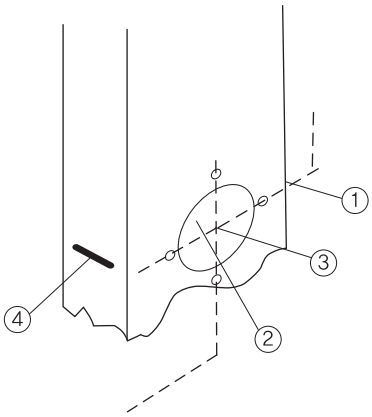

Step 3. Drilling

1) Drill a pilot hole within 2-1/8″ (54 mm) using a hole saw.
2) Drill a 1″ (25 mm) mortise hole using a hole saw.
3) Drill strike plate holes using a drill bit (7/64″, 2.5 mm).

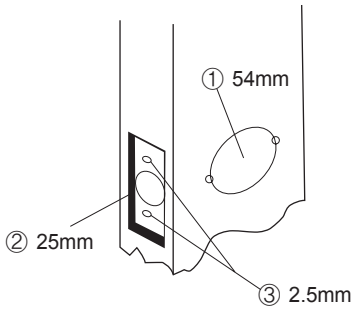

Step 4. Install strike on the door frame

1) Close the door and mark a horizontal line from the center of the template to the frame of the door.
2) Measure half the thickness of the door. Mark this same distance with a vertical line starting from the stop side of the frame. Where both lines cross make a 1″ (25mm) diameter hole, 1/2″ (13mm) in depth.
3) Align the holes of the strike with the vertical line. Trace the outline of the strike and mortise with a 1/16″ (1.6mm). Attach the strike with two screws(provided). (T4 x 15: for wooden door, U10-24 x 9: for steel door)

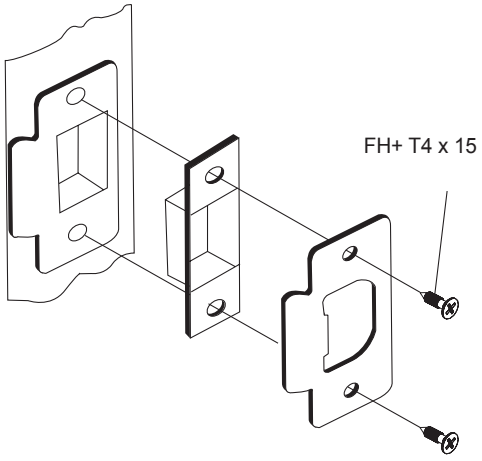

Install Lock

Outside **Inside**

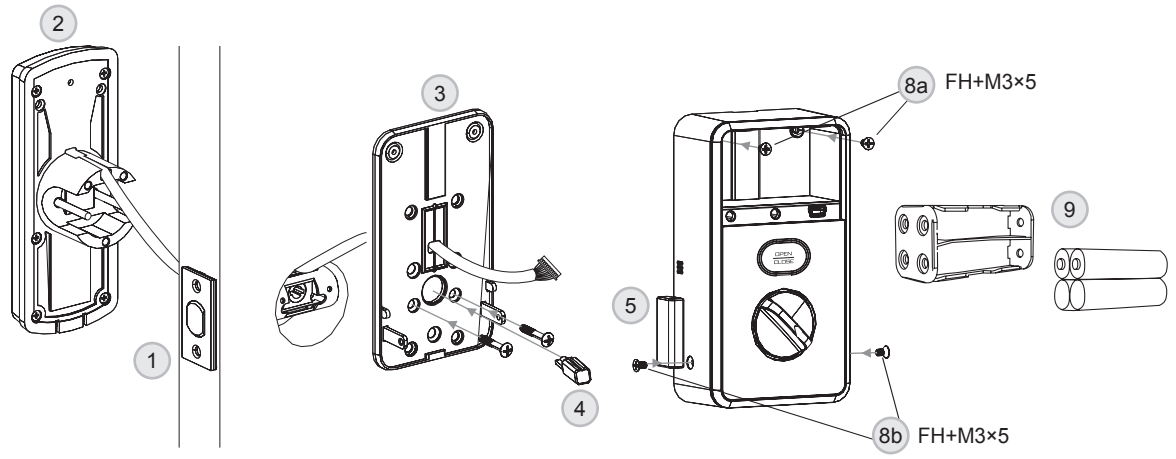

1

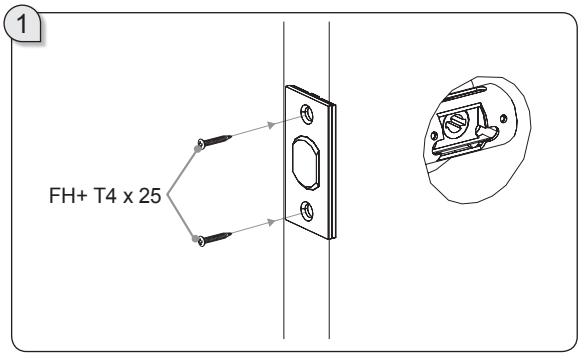

3

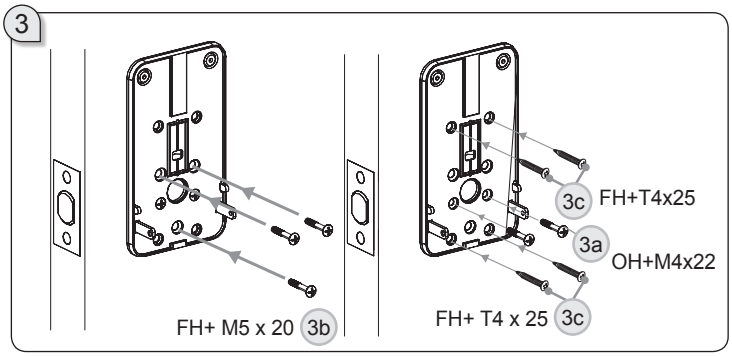

4

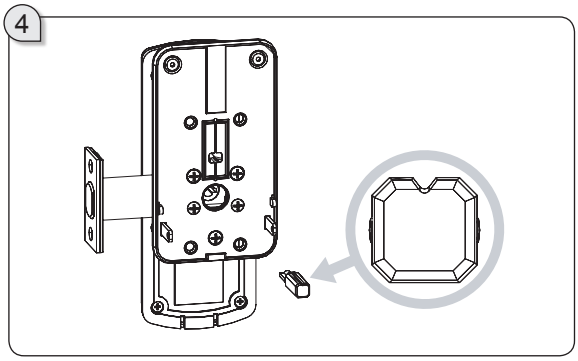

5

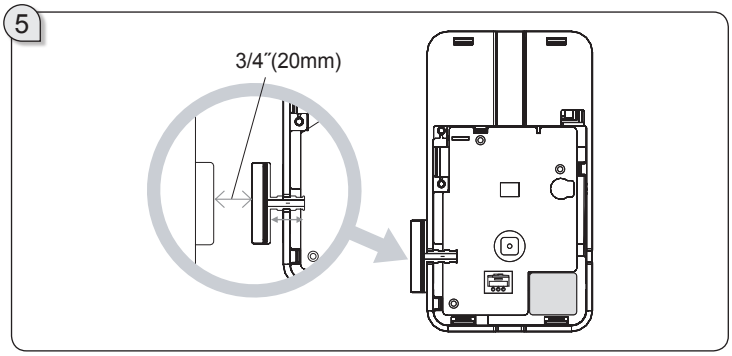

7

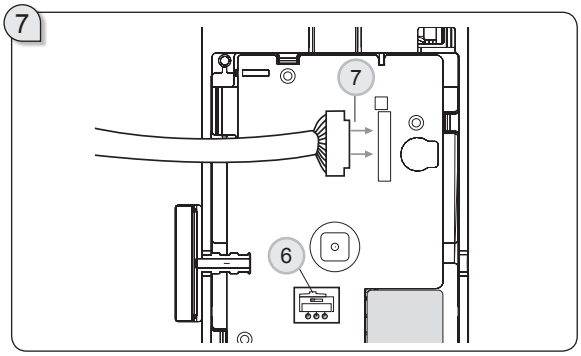

Connect the video intercom

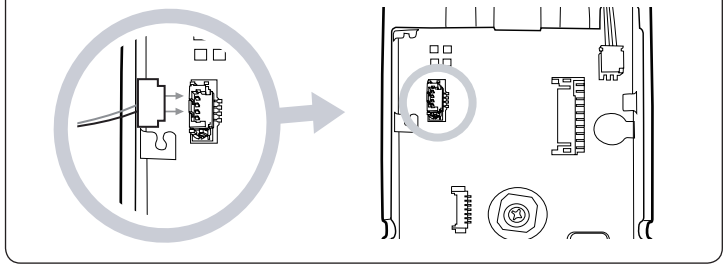

Procedures

1. Insert the deadbolt.

1) Insert the deadbolt from the side of the door.
2) Rotate the deadbolt to adjust the center hole so it is horizontally aligned from the outside.
3) Fix the deadbolt using two T4x25 screws. (T4x25/ T4x15: for wooden door, U10-24x14: for steel door)

2. Insert the outside assembly into inside direction.

(You must insert the outside assembly after aligning it with the center hole of the deadbolt.)

3. Connect the fixing panel.

1) Detach the fixing panel from the inside assembly.
2) First fasten the 2 parts (3a) 90% of the way using M4X22 screws.
3) Fasten the fixing panels using three M5X20 screws. (3b)
4) Align the outside assembly with the fixing panel after making sure they are vertically crossed and then fasten using five screws.
5) Tighten the fixing panel with T4x25 screws. (3c)

4. While the deadbolt is open, insert the turn shaft in an inside-to-outside direction.

5. Install the magnetic sensor in the same direction as the deadbolt.

CAUTION: As the magnet fastened to the doorframe may not be detected if the gap is too large, use the curved section of the magnetic sensor to install the sensor within 3/4″ (20mm) of the magnet.

6. Adjust the switch appropriately for the door hand type (page 4).

CAUTION: If the switch setting is not appropriate for the hand type, opening/closing of the door may function in an opposite manner.

7. Connect the cable to the inside assembly.

8. Fix screws for the inside assembly.

1) After aligning the inside assembly on the fixing panel, to check that the Manual switchgear operates correctly.
2) Open the battery cover of the inside assembly. (There are screw grooves at the upper left and right corners.)
3) Fasten screws at the upper room area using two M3X5 screws. (8a)
4) Fasten the left and right screws on the inside assembly using two M3x5 screws. (8b)

Note: Arrange the cables neatly to prevent them from getting entangled or being compresed.

9. A melody will sound when all 4 alkaline batteries are inserted. Refer to the programming instructions to check that the lock operates correctly.

Connect the video intercom

Connect the cable of video intercom to inside assembly.

Miscellaneous Information

Initializing

Perform initialization to delete all registered information.
Note: All registered Master and user data will be deleted, and the lock reset to the default setting.
(Refer to the Program section in 12 page for default values.)

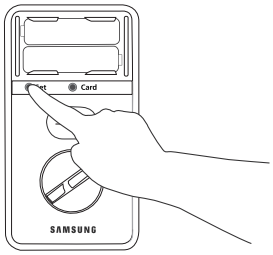

Press the **[Set]** button for 10 seconds.
Successful: “Toot → Toot, toot - Toot, toot, toot, toot’

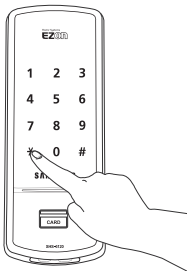

Enter the current Master PIN Code, and press the [*] button.
Successful: “Too~~~t”
Failed: “Toot~”

Inserting Emergency Power

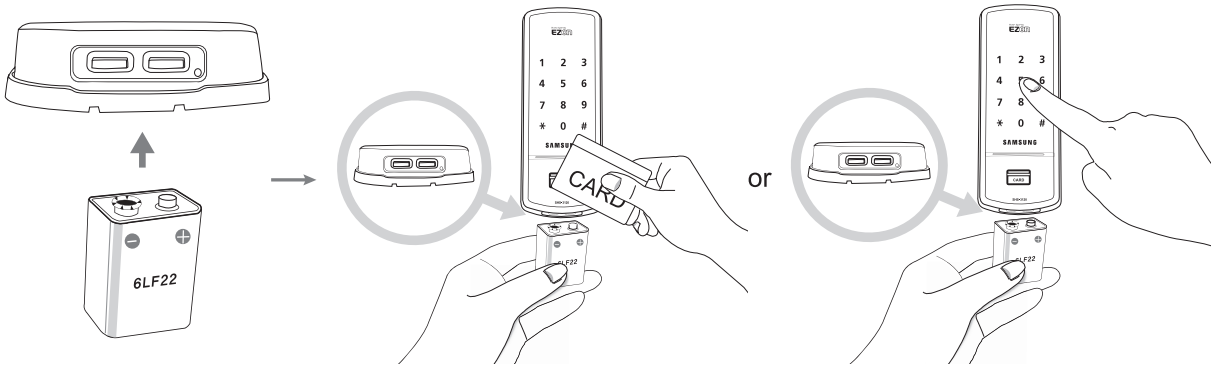

Continuing to use the lock without replacing batteries when required will lead to the batteries discharging and cause the lock to malfunction.
Touch the external power contact of the outside assembly (emergency battery) with a 9V battery and touch with the Card or enter the PIN Code.

Reset function

Note: Resetting does not delete registered information.

If there is no response after pressing the **[Wake Up]** button, use a pin to press the **[Reset]** button on the right of the external power contact of the outside assembly.

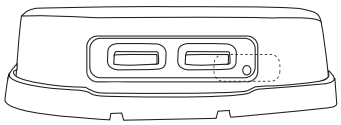

Features

Outside

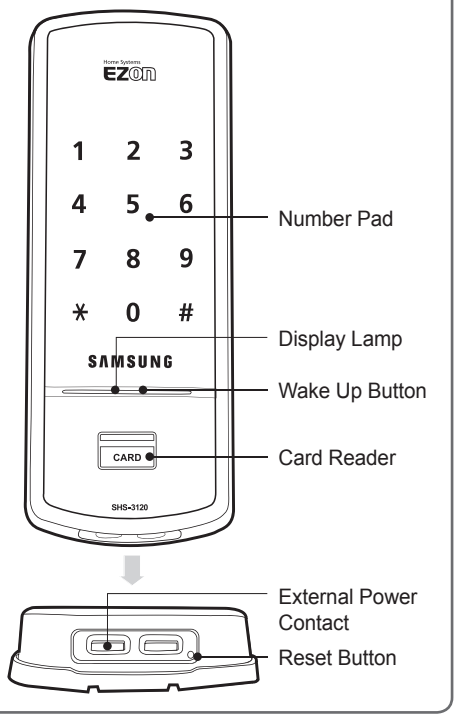

Inside

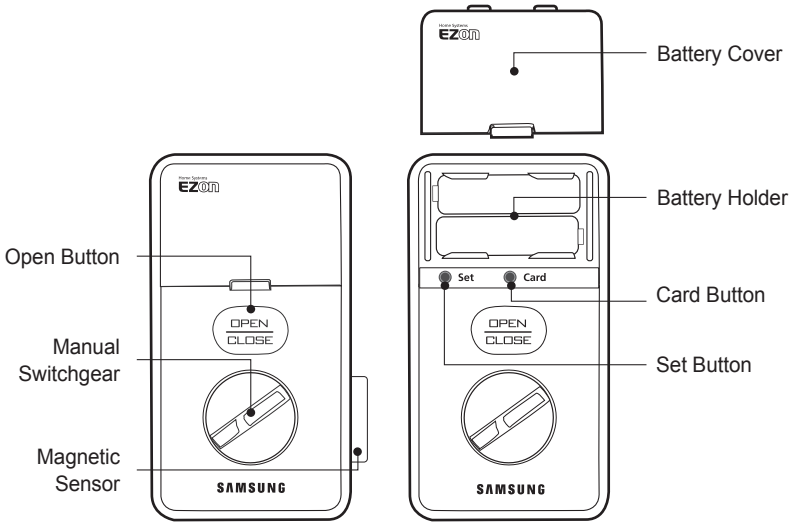

Symbols	Description	Symbols	Description
W	Press the **[Wake Up]** button on the outside assembly. It is used to start inputting or to quit the registration mode.	*	Press the [*] button. It is used to complete the inputting of numbers.
S S 5 S 10	Press the **[Set]** button. It is used to change the PIN Code or set other functions. **S**: Press the **[Set]** button briefly (1 second) **S5**: Press the **[Set]** button for 5 seconds **S10**: Press the **[Set]** button for 10 seconds	CARD CARD 5	Press the **[Card]** button. It is used to register a Card or delete PIN Code/Card information. **Card**: Press the **[Card]** button briefly (1 second) **Card5**: Press the **[Card]** button for 5 seconds.
1 ~ 0	Press the Number buttons.	Mstr PIN	Enter the Master PIN Code (4~12 digits). Factory Default: 1234

Symbols	Description	Symbols	Description
U PIN	Enter the User PIN Code (4~12 digits).(4~12 digits).	®	Repeat the process inside the shape.
U CARD	Touch the Card reader with the User Card.	OPEN	Press the **[OPEN]** button.
Mgmt NO	Enter the Management Number. Can be set from 1 to 70.		Sound Icon Display.

Sound Indicators

Sound	Description
Fur Elise Tiritiritiririri	Low voltage warning sound At the same time, **[OPEN]** button flash in red.
Toot	Button input sound
Toot~~ (long)	Error sound
Too~~~t	Success sound
Toot toot	Input standby sound
Toot~ toot~ (10 seconds)	Malfunction prevention warning
Ti~ ti~ ti~ ti~ (5 minutes)	Intrusion Detection/Out-of-home Security warning
Too~~t, too~~t	Double locking sound

Definitions

Card Button : It is used to register a Card or delete PIN Code/Card information. The length of time the Card button is pressed varies depending on the function. This button is found below the battery cover of the inside assembly.

Double-locking : Double-locking locks the door forcibly from the inside to prevent it from being unlocked from outside. You can enable it by using the [OPEN] button.

Emergency Power Supply : Continuing to use the lock without replacing batteries when required will lead to the batteries discharging and cause the lock to malfunction. You can open the door by touching the external power contact on the outside assembly (emergency battery) with a 9V battery and touching with the Card or entering the PIN Code.

Indicator Lamp : Indicates the operational status when the Card is being read or the lock is in operation.

Initializing : Deletes all registered information and restores the factory default. After initializing, change the Master PIN Code for security.

Intrusion Detection Function : When the inside assembly is forcibly detached while the door is locked, it is detected by the magnetic sensor and an alarm is sounded. (The function is not activated when the magnet is not used.)The Intrusion Detection function is a basic function and cannot be enabled or disabled.

Locking Mode (Auto/Manual) : You can enable or disable the function for locking the door automatically when it is closed. The factory default is 'Auto mode'. - Auto: The door is locked automatically 2 seconds after it is closed. However, it does not function if the magnet is not used or the batteries are completely discharged. - Manual: The door is not locked automatically when it is closed, and pressing the [Wake-up] button or the [OPEN] button on the inside assembly locks the door.

Low Voltage : Refers to the state when the operating voltage of the lock is lower than the standard voltage, and activates the Low Voltage Alarm ("Fur Elise") to indicate that the batteries need to be replaced. Use the Emergency Power when the batteries are completely discharged.

Magnetic Sensor : Detects the opening and closing of the door.

Malfunction Prevention Function (Mischief Prevention Function) : Over 5 failed authentication attempts with unregistered PIN Codes/Cards sounds a warning for 10 seconds, and the lock stops operating for 3 minutes. While lock operation is stopped, a 'beep' is sounded every 10 seconds and the lock is activated again automatically after 3 minutes. Authenticating with a registered PIN Code or Card deactivates the warning sound. The Malfunction Prevention function is a basic function and cannot be enabled or disabled.

Management Number : It is the same number as the registered user's address, and can be set from 1 to 70. The Management Number should be managed with caution as it is used to register or delete User PIN Codes/Cards.

Manual Switchgear : When the batteries are completely discharged, this device is used to mechanically lock or unlock the door from inside.

Master PIN Code : You can enter only one Master PIN (4-12 digits) Code. You can register the User PIN Codes/Cards after authenticating with the Master PIN (4-12digits) Code. You can open the door with the Master PIN Code, and the factory default is '1234'.

OPEN Button : A one-touch button to open the locked door. (It is also used to lock the door from inside in the Manual locking mode.)

Out-of-home Security Function : This function prevents intrusions from outside while no one is home. Pressing the [OPEN] button or turning the manual opening/closing device while the Out-of-home function is enabled sounds an alarm. You can enable the function by using the Master PIN Code or User PIN Code.

Random Security Function : This mode prevents the disclosure of the PIN Code by entering the PIN Code after authenticating 2 arbitrarily selected numbers. When the buttons for 2 arbitrarily selected numbers are illuminated, pressing the 2 illuminated buttons illuminates the whole number pad. You can enable or disable the Random Security function and the factory default is 'Enable'.

Reset Button : This button resets the lock when the lock stops functioning. Registered information is not deleted.

Set Button : This button is used to change the Master PIN Code/User PIN Codes or the lock settings. It is found below the battery cover of the inside assembly. The length of time the Set button is pressed varies depending on the function.

Sound Setting : It sets the volume of sound emitted during the input of numbers and opening or locking of the door (Level 0~ Level 3).The sound is muted at Level 0, and is at maximum volume at Level 3. The factory default is Level 2, and the registration mode operates at Level 2 regardless of the sound setting.

User Card : You can register up to 70 User Cards including the User PIN Codes. You can open the door with a User Card.

User PIN Code : You can register up to 70 User PIN Codes (4-12 digits) including the User Cards. You can open the door with a User PIN Code.

Wake Up Button : Pressing this button activates the number pad. Enter the PIN Code or touch with the Card while the number pad is illuminated, and when not illuminated press the [Wake Up] button to illuminate the pad. It is also used to quit the registration mode.

Scope of Master, User Settings

Settings	Master	User
Opening the Door	✓	✓
Setting Up the Sound	✓	✓
Changing Master PIN Code	✓	
Registering User PIN Code/Card	✓	
Deletion of User Code/Card	✓	
Setting the Locking Mode	✓	✓
Setting Out-of-home Security	✓	✓
Setting Double-locking	✓	✓
Setting Random Security	✓	✓
Initializing	✓	

Factory Defaults

Function	Factory Defaults
Master PIN Code	1234
Volume	2 levels
User PIN Code/Card	None
Locking Mode	Auto
Out-of-home Security Function	Released
Double-locking	Released
Random Security	Enable

Operation of Lock

Opening the door with a PIN Code

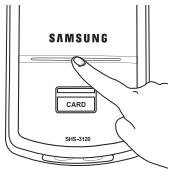

Press the **[Wake Up]** button.

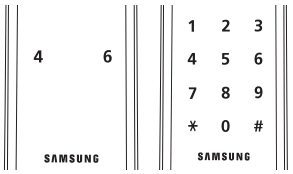

The number pad is illuminated. (If the Random Security function is enabled, press the 2 illuminated numbers.)

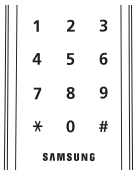

Enter the PIN Code and press the [*] button.
Successful: Too~~~t
Failed: Toot~~

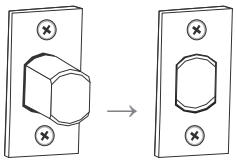

The door opens within a second.

Opening the door with a Card

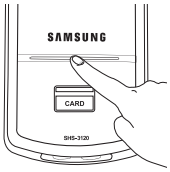

Press the **[Wake Up]** button.

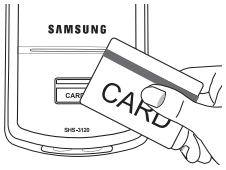

Touch the Card reader with a Card.
Successful: Too~~~t
Failed: Toot~~

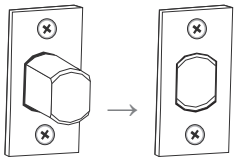

The door opens within a second.

Basic Operation

Note: Pressing the **[Set]** or **[Card]** button is available while the door is opened. (Deadbolt must be unlocked.)

Changing the Master PIN Code

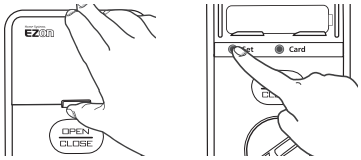

Open the battery cover of the inside assembly and press the **[Set]** button for 5 seconds.
🔊 Toot → too, toot

When the number pad is illuminated, enter the current Master PIN Code ('1234' after initializing) and press the [*] button.
Successful: 🔊 Too~~~t, toot, toot
Failed: 🔊 Toot~~

Enter the new Master PIN Code and press the [*] button.
Successful: 🔊 Toot~~~t
Failed: Toot~~

Registering a User PIN Code

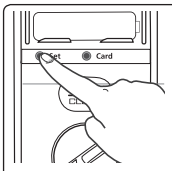

Open the battery cover of the inside assembly and press the **[Set]** button briefly.
🔊 Toot

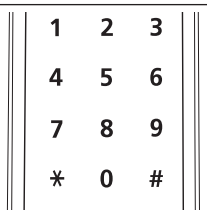

When the number pad is illuminated, enter the current Master PIN Code ('1234' after initializing) and press the [*] button.
Successful:
🔊 Too~~~t,
toot, toot
Failed: 🔊 Toot~~

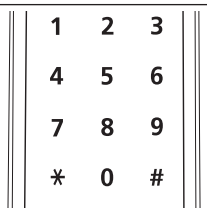

Enter a Management Number (1~70) to register the User PIN Code and press the [*] button.
*You can't enter a Management Number already registered.
Successful:
🔊 Toot, toot
Failed: 🔊 Toot~~

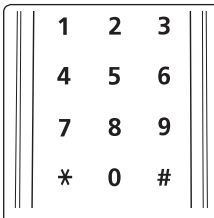

Enter a new User PIN Code and press [*] button.
Successful:
🔊 Too~~~t
Failed: 🔊 Toot~~

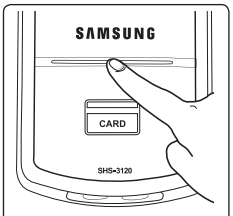

Press the **[Wake Up]** button to quit without registering another User PIN Code.

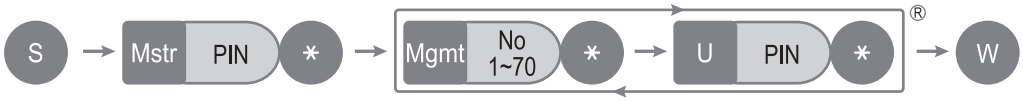

Registering a User Card

Open the battery cover of the inside assembly and press the **[Card]** button briefly.
Toot

When the number pad is illuminated, enter the current Master PIN Code ('1234' after initializing) and press the [*] button.
Successful: Too~~~t, toot, toot
Failed: Toot~~

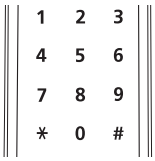

Enter a Management Number (1~70) to register the User Card code and press the [*] button.
* You can't enter a Management Number already registered.
Successful: Toot, toot
Failed: Toot~~

Touch the Card reader with the Card to register.
Too~~~t

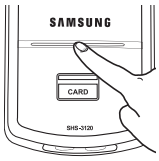

Press the **[Wake Up]** button to quit without registering another User Card.

User PIN Code / Card deletion

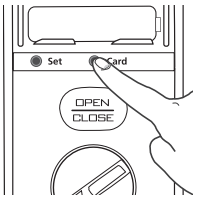

Open the battery cover of the inside assembly and press and hold the **[Card]** button for 5 seconds.
Toot → Toot, toot

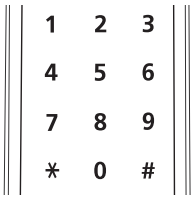

Enter the Master PIN Code and press the [*] button.
Successful:
Too~~~t, toot, toot
Failed: Toot~~

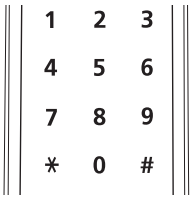

Enter the Management Number (1 to 70) of the User PIN Code or card to be deleted and press the [*] button.
Successful: Too~~~t
Failed: Toot~~

Setting the Out-of-home Security function

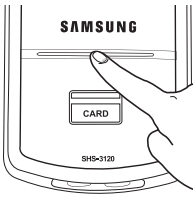

Press and hold the **[Wake Up]** button on the outdoor assembly while the door is locked.

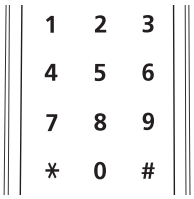

Press and hold the [#] button on the outdoor assembly for 3 seconds.

Too~~t, too~~t

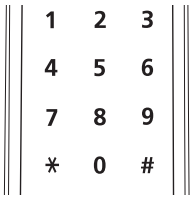

Enter the Master PIN Code or User PIN Code and press the [*] button to set the security function.

Too~~~t

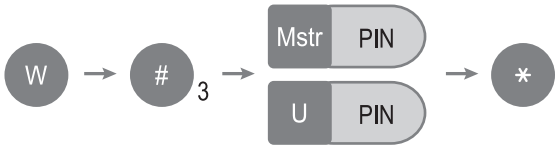

Setting Double Locking

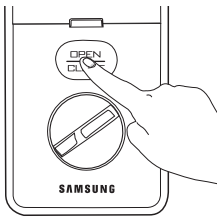

Press the **[OPEN]** button on the inside assembly for 5 seconds while the door is locked.

OPEN 5 Too~~~t

Releasing Double Locking

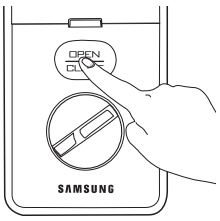

Press the **[OPEN]** button on the inside assembly or turn the Manual switchgear.

OPEN Toot~~

Additional functions

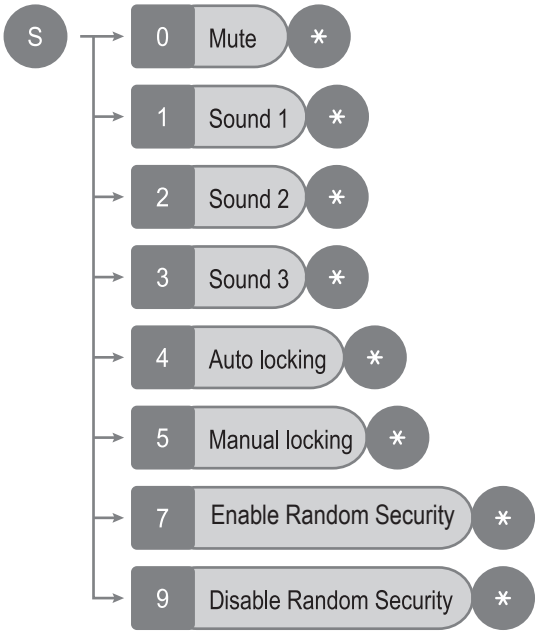

Troubleshooting

When the lock doesn't function correctly, please check the items below.
If you can't resolve the problem, please contact the nearest service center.

Problem	Resolution	Reference
There is no power.	● Check if the batteries are faulty or inserted in the correct polarity. ● Check if the batteries are inserted properly or completely discharged.	-
I can't change the Master PIN Code.	● There was a delay while changing the PIN Code. The number pad must be illuminated when changing the PIN Code. Also, after entering the first digit the next digit must be entered within 10 seconds. ● Replace the batteries if they are discharged. ● Refer to the 'Registering/changing the Master PIN Code' section in the user manual and try again.	Page 14
I can't register the User PIN Code.	● If the Management Number entered already contains other information, register after entering a different Management Number. ● Try registering again after checking that the User PIN Code is a number of 4~12 digits.	Page 14
I can't register the User Card.	● If the Management Number entered already contains other information, register after entering a different Management Number. ● You must touch the Card reader with the Card within 10 seconds of entering the Management Number.	Page 15
I entered the PIN Code and pressed the [*] button, but the door won't open.	● Check that the registered PIN Code was entered correctly. ● If the number pad illumination is turned off while entering the PIN Code, the button input is not registered. Press the **[Wake Up]** button to illuminate the number pad and enter the PIN Code again from the beginning. (The number pad illumination is turned off automatically if there is no input within 5 seconds)	Page 13
I can't unlock the door with my Card.	● The Card is either unregistered or unrecognized, so try again after registering the Card. ● The Card must touch the Card reader correctly.	Page 13
I can't unlock the door with my PIN Code or Card.	You can't unlock the door with a PIN Code or Card from outside if the Double-locking function is enabled. Pressing the **[Wake Up]** button when the Double-locking function is enabled causes the lock to emit a 'Too~~t, too~~t' sound.	Page 16
My PIN Code or Card is authenticated but the door won't open.	The locking device may be malfunctioning. Please contact the service center.	-

The door won't lock automatically when I close it.	● Check if Auto Locking is set. When Manual Locking is set, pressing the **[Wake Up]** button locks the door. ● If the door doesn't lock automatically when Auto Locking is set, then the lock has been installed incorrectly. Contact a digital lock outlet and have the lock reinstalled. ● The Auto Locking function is not activated when the batteries are completely discharged. Check if the batteries are discharged.	Page 16
I hear the "Too~~t, too~~t" warning sound when I press the **[Wake Up]** button.	When the Double-Locking function is enabled, pressing the **[Wake Up]** button issues a warning sound. Check if Double-locking is enabled, disable the function and try again.	Page 16
The lock issues a strange buzzer sound (Fur Elise) when I activate it.	The sound indicates that it is time to replace the batteries. Replace with new batteries within a week.	Page 10
There is no response when I press the **[Wake Up]** button.	● Use a pin to press the hole on the right of the external power contact of the outside assembly. ● If doing the above does nothing, contact the service center.	Page 8

Management Number Table

Management No.	PIN CODE/CARD	User Name	Management No.	PIN CODE/CARD	User Name

Product Specifications

Item	Specifications	
Voltage	4 AA Alkaline 1.5 Batteries (LR6) (6V)	
Emergency Power Source	9V Battery (6LF22) (purchased separately)	
Operation Method	Electronic Control Method (Password entry or Card reading)	
Weight	1.8Kg (including both inside and outside assembly)	
Product Dimensions	outside assembly	68.7 mm (W) × 175.1 mm (H) × 21.5 mm (D)
		2.70 inch (W) × 6.89 inch (H) × 0.85 inch (D)
	inside assembly	69.9 mm (W) × 128.0 mm (H) × 40.5 mm (D)
		2.75 inch (W) × 5.04 inch (H) × 1.59 inch (D)
	Card	85.5 mm (W) × 54.0 mm (H) × 0.9 mm (D)
		3.38 inch (W) × 2.13 inch (H) × 0.04 inch (D)

The content of this manual is subject to change without prior notice to the user in order to enhance the performance of the product.

FCC NOTICE

NOTE : This equipment has been tested and found to comply with the limits for a Class B digital device, pursuant to part 15 of the FCC Rules. These limits are designed to provide reasonable protection against harmful interference in a residential installation.

This equipment generates, uses and can radiate radio frequency energy and, if not installed and used in accordance with the instructions, may cause harmful interference to radio communications. However, there is no guarantee that interference will not occur in a particular installation. If this equipment does cause harmful interference to radio or television reception, which can be determined by turning the equipment off and on, the user is encouraged to try to correct the interference by one or more of the following measures:

- Reorient or relocate the receiving antenna.
- Increase the separation between the equipment and receiver.
- Connect the equipment into an outlet on a circuit different from that to which the receiver is connected.
- Consult the dealer or an experienced radio/TV technician for help.

CAUTION : Changes or modifications not expressly approved by the manufacturer responsible for compliance could void the user's authority to operate the equipment.

LIMITED PRODUCT WARRANTY

Installation of the product is considered acceptance of warranty conditions

SEOUL COMMTECH CO., LTD (SEOUL COMMTECH) warrants its products to be free from manufacturing defects in materials and workmanship for 12 months from the date of purchase. SEOUL COMMTECH will, within said period, at its option, repair or replace any product failing to operate correctly without charge to the original purchaser or user.
This warranty shall not apply to any equipment, or any part thereof, which has been repaired by others, improperly installed, improperly used, abused, altered, damaged, subjected to acts of God, or on which any serial numbers have been altered, defaced or removed. SEOUL COMMTECH does not warrant the performance or sale conditions of the seller/installer.
There are no warranties, express or implied, which extend beyond the description on the face hereof. There is no express or implied warranty of merchantability of a warranty of fitness for a particular purpose. Additionally, this warranty is in lieu of all other obligations or liabilities on the part of SEOUL COMMTECH.
Any action for breach of warranty, including but not limited to any implied warranty of merchantability, must be brought within the six months following the end of the warranty period. In no case shall SEOUL COMMTECH be liable to anyone for any consequential or incidental damages for breach or this or any other warranty, express or implied, even if the loss or damage is caused by the seller's own negligence or fault.
SEOUL COMMTECH shall have no obligation under this warranty, or otherwise, if the product has been repaired by others, improperly installed, improperly used, abused, altered, damaged, subjected to accident, nuisance, flood, fire or acts of God, or on which any serial numbers have been altered, defaced or removed. SEOUL COMMTECH and its distributor will not be responsible for any dismantling, reassembly or reinstallation charges. This warranty contains the entire warranty. It is the sole warranty and any prior agreements or representations, whether oral or written, are either merged herein or are expressly cancelled. SEOUL COMMTECH neither assumes, nor authorizes any other person purporting to act on its behalf to modify, to change, or to assume for it, any other warranty or liability concerning its products. In no event shall SEOUL COMMTECH be liable for an amount in excess of SEOUL COMMTECH's original selling price of the product, for any loss or damage, whether direct, indirect, incidental, consequential, or otherwise arising out of any failure of the product. Seller's warranty, as hereinabove set forth, shall not be enlarged, diminished or affected by and no obligation or liability shall arise or grow out of Seller's rendering of technical advice or service in connection with Buyer's order of the goods furnished hereunder.
SEOUL COMMTECH recommends that the entire system be completely tested weekly.

Warning: Despite frequent testing, and due to, but not limited to, any or all of the following; criminal tampering, electrical or communications disruption, it is possible for the system to fail to perform as expected. SEOUL COMMTECH does not represent that the product/system may not be compromised or circumvented; or that the product or system will prevent any personal injury or property loss by burglary, robbery, fire or otherwise; nor that the product or system will in all cases provide adequate warning or protection. A properly installed and maintained alarm may only reduce risk of burglary, robbery, fire or otherwise but it is not insurance or a guarantee that these events will not occur.

Consequently, seller shall have no liability for any personal injury, property damage, or other loss based on a claim the product failed to give warning.
Therefore, the installer should in turn advise the consumer to take any and all precautions for his or her safety including, but not limited to, fleeing the premises and calling police or fire department, in order to mitigate the possibilities of harm and/or damage. SEOUL COMMTECH is not an insurer of either the property or safety of the user's family or employees, and limits its liability for any loss or damage including incidental or consequential damages to SEOUL COMMTECH's original selling price of the product regardless of the cause of such loss or damage.

Some states do not allow limitations on how long an implied warranty lasts or do not allow the exclusion or limitation of incidental or consequential damages, or differentiate in their treatment of limitations of liability for ordinary or gross negligence, so the above limitations or exclusions may not apply to you. This Warranty gives you specific legal rights and you may also have other rights which vary from state to state.

In case of the product defect, contact our U.S. Customer Service Center. In order to exercise the warranty, you must contact our U.S. Customer Service Center and obtain a proper RMA # - the product must be returned to our U.S. Customer Service Center at user's shipping expense and the replacement product will be shipped back at our expense (For U.S customer : 201-905-9200)

For outside U.S customer, visit our website at www.scommtech.com/en and go to Support menu to find the contact information of our worldwide distributors.

For product service, the product in all cases must be accompanied by below warranty form. Customer must ask the reseller or installer to fill out the warranty form indicated below, otherwise the product warranty may be considered void.

Date of Purchase or Installation : _____ (MM/DD/YY)

Name, telephone and full address of purchaser : _____

_____

_____

Stamp or Signature of authorized reseller / installer

Product Code and Serial Number :

_____

_____

Drilling Templete Sheet

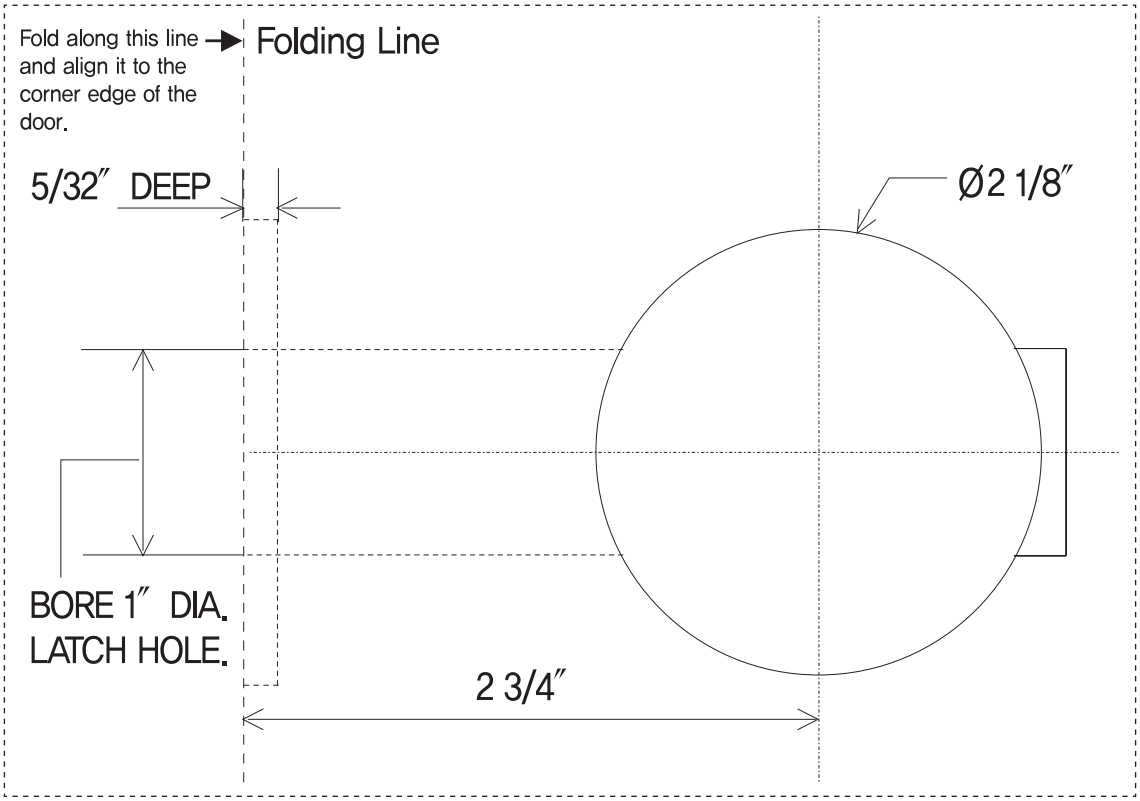

MEMO

MEMO

SEOUL COMMTECH

EZON® is a registered trademark of SEOUL COMMTECH Co.,Ltd.
Other products' brand names may be trademarks or registered trademarks of their respective owners and are mentioned for reference purposes only. These materials are protected under U.S. copyright laws.
All contents current at time of publication.
SEOUL COMMTECH Co.,Ltd., reserves the right to change availability of any item in this catalog, its design, construction, and/or its materials.
Copyright © 2009, EZON, SEOUL COMMTECH Co.,Ltd. All right reserved.
Reproduction in whole or in part without the express written permission of SEOUL COMMTECH is prohibited.

GC68-01187A ED:02